Product Specification Sheet

Product Name: 2MP PC Camera Module WEB CAMERA
Model: DS52M37
Version: V1.0

Customer Confirmation (Customer Signatures)

Version History

Version	Date	Description	Approved By
V1.0	2024-02-20	Initial Release	Liu Mingjian

Table of Contents

1. Overview
2. Product Appearance
3. Product Specifications
4. Environmental Conditions
5. Electrical Characteristics
6. Communication Protocol
7. Capacitive Microphone Specifications
8. Mechanical Characteristics and Connector Definition
9. IR-Cut Filter Spectrum

---

1. Overview

This series of USB camera modules is designed for applications such as web cameras, live streaming, and video conferencing. It uses a high-sensitivity sensor and a high-fidelity, low-noise capacitive microphone. With advanced circuit design, the module

features high image quality, low distortion, and low noise. The PCBA board has standard dimensions of 54.5 × 19 mm and is compatible with most housings on the market.

The product supports UVC1.1/2.0 interface technology, is driver-free, and supports various versions of Windows (98 SE/ME/2000 SP4/XP/Vista/7/8/Server2003~2016/10), Linux, Android, and macOS. It can connect to personal computers and Android devices for master-slave half-duplex serial communication. Suitable for online streaming, video conferencing, instant messaging, voice intercom, remote teaching, etc.

Key Features:

- 2MP, 1/3.05 inch high-performance, low-power image processor
- Sharp and detailed image with resolution up to 1920 × 1080P
- Excellent performance under low-light conditions
- Operating temperature: -20°C to +70°C
- Rolling shutter, auto electronic shutter
- Auto gain control, adaptive brightness
- Supports YUV2 / MJPG / H.264 video output
- Wide voltage range: DC 4.2V~5.5V, low power consumption: 5V@160mA
- Low USB bandwidth usage

---

2. Product Appearance

This series uses a standard camera module design. The PCB is black and glossy, free from noticeable dents, scratches, cracks, deformations, or stains. Surface should be uniform, with no bubbling, cracking, peeling, or abrasion. Metal parts must be rust-free. Text markings must be clear and complete. (Microphone and module are packed separately.)

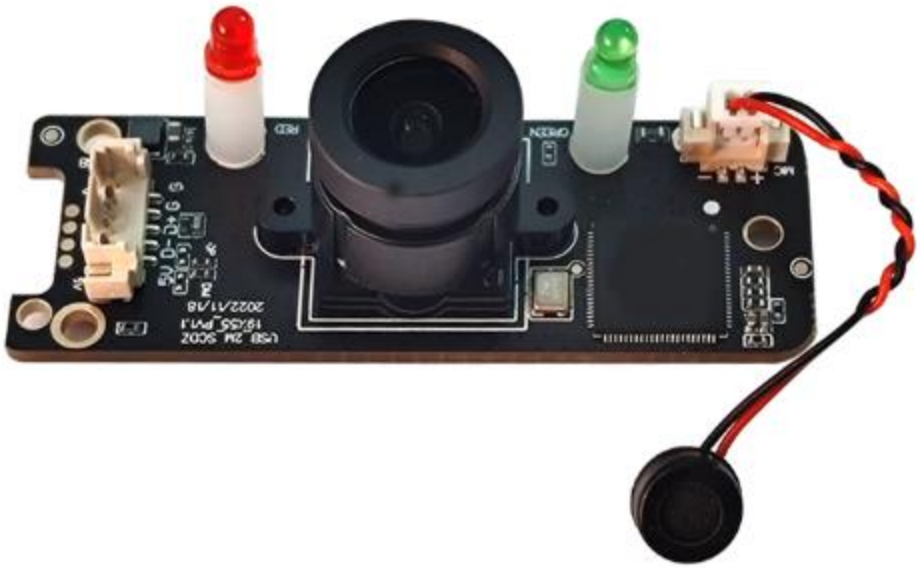

LED column height: 15 mm
Lens holder screw hole distance: 20 mm
Lens shown: Non-distortion lens, TTL height 15.7 mm
Product appearance image (actual photo)

---

3. Product Specifications

No.	Item	Description
1	Sensor Size	1/3.05 Inch
2	Pixel Size	3.0 × 3.0 µm
3	Color Format	RGB 24-bit
4	Focus Type	Fixed focus lens, 20 mm hole distance
5	Image Capture Time	< 1.2 seconds
6	Compression Format	MJPG / YUY2 / H.264
7	Dynamic Range	0~86 dB
8	Interface	USB 2.0
9	Supported Systems	Windows XP/7 SP2/8/10/11, Linux 2.6.26+, Android, macOS
10	Resolutions	See below
11	White Balance	Auto
12	Exposure Control	Auto
13	SNR	< 41 dB

MJPG Resolutions (30 fps):
- Landscape: 2560×1440, 1920×1080 (default), 1280×720, 800×600, etc.
- Portrait: 1080×1920, 960×1280, 720×1280, etc.

YUY2 Resolutions (25 fps):
- 640×360 (default), 160×120, 320×240, etc.

H.264 Resolutions (30 fps):
- Landscape: 2560×1440 (default), 1920×1080, 1280×720, etc.
- Portrait: 1080×1920, 960×1280, etc.

---

4. Environmental Conditions

No.	Item	Specification	Unit	Remarks
1	Operating Temp.	-20 ~ +70	°C	
2	Storage Temp.	-40 ~ +90	°C	
3	Humidity	15% ~ 85%	%	
4	Cooling Method	Natural air cooling		
5	Altitude	≤ 3000	m	
6	MTBF	≥ 50,000	H	

---

5. Electrical Characteristics

Input Characteristics:

No.	Item	Spec	Unit
1.1	Rated Voltage	5 ± 0.5	Vdc
1.2	Rated Current	180 ± 10	mA
1.3	Max Current	190	mA

---

6. Communication Protocol

1. Physical Layer Requirements:

- Interface: USB 2.0
- Cable: 5-core shielded
- Recommended Cable Length: < 1 meter

- Transfer Speed: 480 Mbps
- Data Exchange: Half-duplex
- Protocol: USB 2.0

2. Protocol Description:

- Host: PC/Android/Linux devices
- Device: Camera module
- Host initiates requests; device responds
- Device firmware contains device name, manufacturer, version, VID, PID, serial number (0x00000001 ~ 0x11111111, user-defined)
- Once powered via USB, the camera initializes and communicates with the host for ID validation; software like AMCAP can be used to start video feed

---

7. Capacitive Microphone Specifications

No.	Item	Symbol	Unit	Specification	Condition
1	Directivity	—	—	Omnidirectional	—
2	Sensitivity	S	dB	-36 ± 2	f=1KHz, 1Pa, 0dB=1V/Pa
3	Operating Voltage	Vs	VDC	3	—
4	Output Impedance	Zout	KΩ	2.2	f=1KHz, 1Pa
5	Max Operating Voltage	—	VDC	10	—
6	Sensitivity Reduction	ΔS-Vs	dB	-3	Vs=2.0V to 1.5V
7	Frequency Range	f	Hz	100 ~ 20,000	—
8	Max Current Consumption	IDSS	mA	0.5	Vs=2.0V, RL=2.2KΩ
9	Signal-to-Noise Ratio	S/N	dBA	58	f=1KHz, 1Pa, A-weighted
10	Max Input Sound Level	MISPL	dB	110	f=1KHz, Distortion < 1%

No.	Item	Symbol	Unit	Specification	Condition
11	Dimensions	—	mm	ϕ6.0 × 2.7	See appearance drawing
12	Weight (Max)	—	g	0.25	—
13	Material	—	—	Aluminum	—

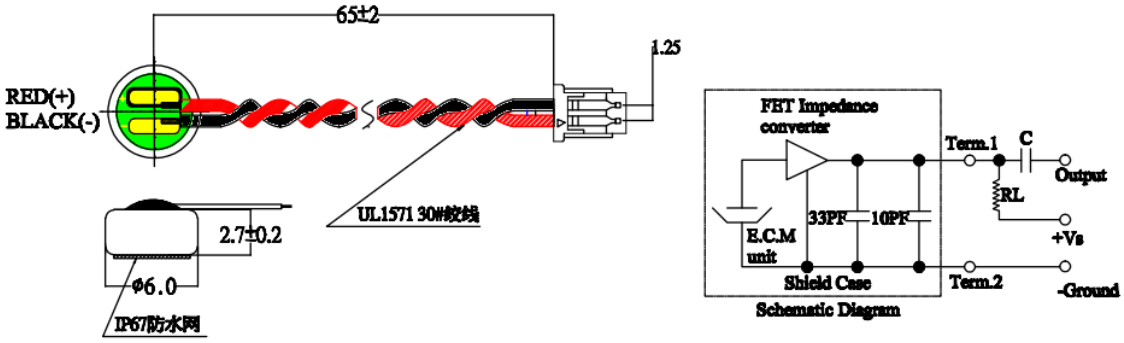

8. Mechanical Characteristics & Connector Definition

1. Dimensions:
- Maximum: 54.5 × 19 × 9.6 mm (L × W × H)
- PCB Thickness: 1.6 mm

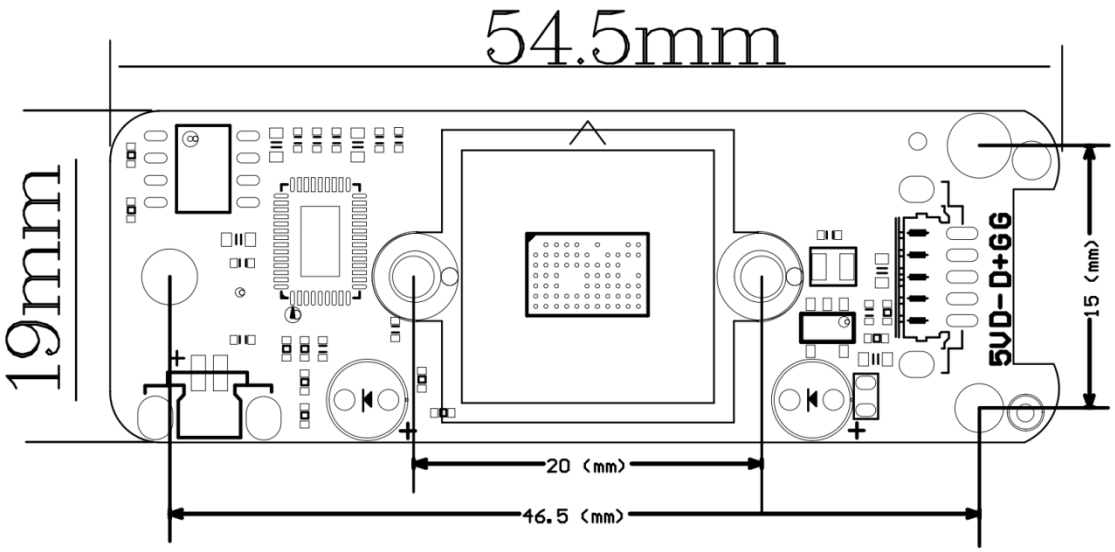

2. USB Interface (J1):

Pin	Signal
1	5V
2	DM (D-)
3	DP (D+)
4	GND

---

9. IR-Cut Filter Spectrum
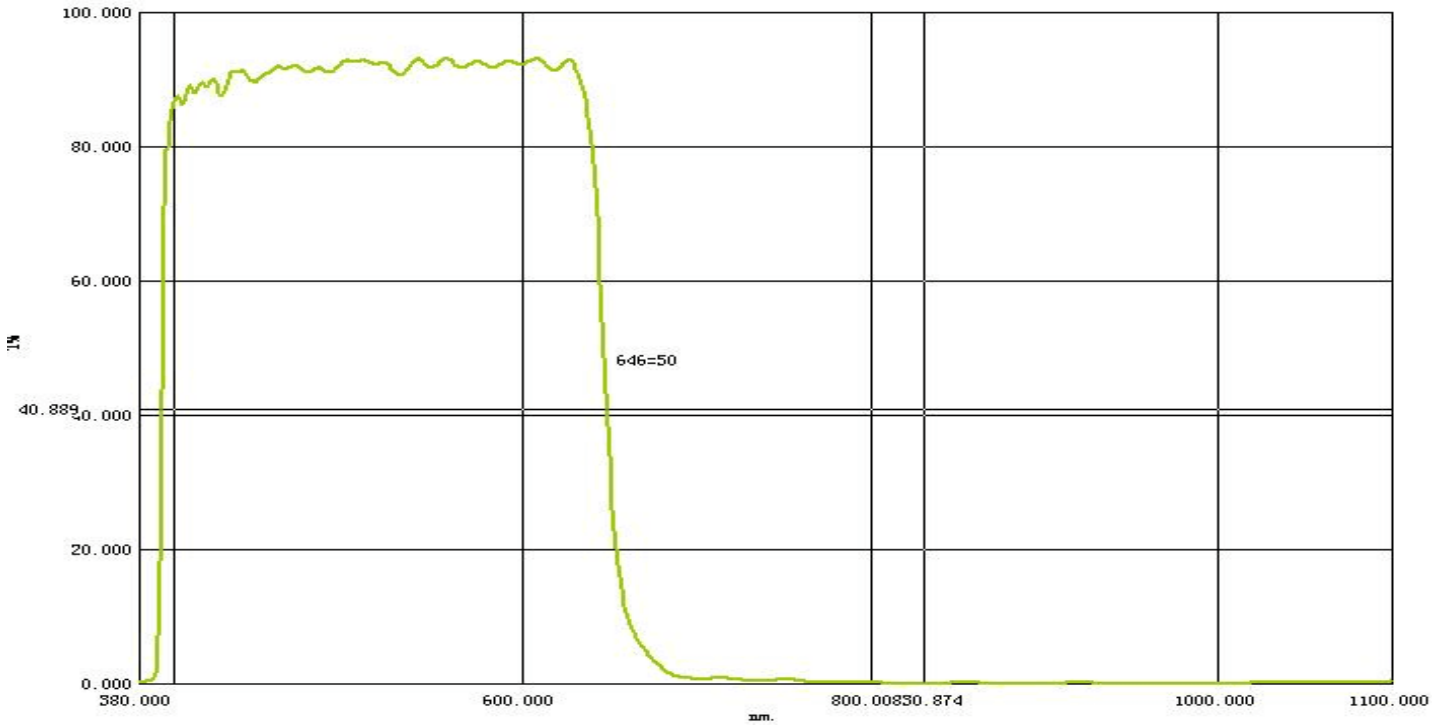
Color filter spectrum (image or graph to be referenced in original document).